ISA500

ALTIMETER & SINGLE BEAM ECHOSOUNDER

IMPACT SUBSEA
INNOVATIVE SENSORS

FEATURES & BENEFITS

120+ METER RANGE

Proven long range measurement.

1MM ACCURACY

Proven millimetre accuracy.

INTEGRATED AHRS*

Provides Magnetic Heading to ±1°
Pitch & Roll to 0.2° accuracy.

ECHOGRAM*

Visualise sonar backscatter data.
Up to 2,000 samples per ping.

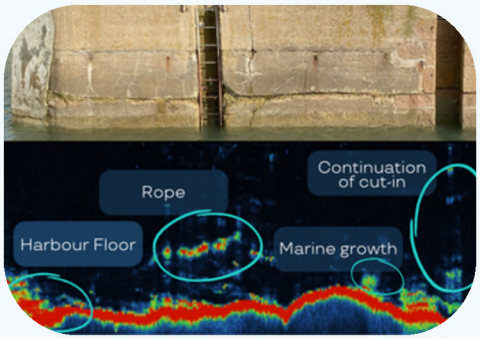

EMULATE ANY DEVICE

Direct replacement of existing equipment.

VARYING DEPTH RATINGS

Available in 1000m, 6000m and 11,000m depth ratings.

Impact Subsea are proud to present the ground breaking ISA500 family of altimeters and single beam echosounders. Highly robust, with optional integrated Attitude and Heading Reference System (AHRS).

The ISA500 utilises a broadband composite transducer together with an advanced digital acoustic engine to provide the highest level of stability and range available from a 500kHz Altimeter.

With integrated AHRS, the ISA500 has the ability to compensate for pitch and roll - providing a true altitude reading at all times. For applications where Altitude, Heading, Pitch and Roll are required; all can be provided from a single device.

Provided in Titanium or Acetal Housing, available in forward looking or right angled configurations. Can be supplied without integrated AHRS. Alternative configurations available on request.

THE QUEEN'S AWARDS FOR ENTERPRISE: INNOVATION 2021

In 2021, the ISA500 gained recognition from the UK's most prestigious business awards, winning a Queen's Award for Enterprise in the innovation category.

*Optional

APPLICATIONS INCLUDE:

Scour Monitoring | Touchdown Monitoring | Hydro-graphic Survey | Motion Reference | Wave Height Measurement | Equipment Deployment | Under Ice Measurement | Underwater Positioning | ROV & AUV Altitude, Heading & Attitude |

impactsubsea.com

IMPACT SUBSEA
INNOVATIVE SENSORS

ISA500

ALTIMETER & SINGLE BEAM ECHOSOUNDER

ACOUSTIC

Frequency	500kHz Standard 400 to 600kHz selectable in 1kHz steps
Range	0.1 to 120m+ *Dependent on seabed type*
Accuracy	1mm
Resolution	1mm
Beam Angle	6° conical at 500kHz
Signalling	Monotonic
Pulse Length	User Defined

COMMS & POWER

Digital	RS232 & RS485
Protocol	4800 to 115,200 baud
Analogue	0 to 5V DC, 0 to 10V DC or 4-20mA*
Data	Continuous or on demand
Data Rate	Up to 100Hz
Input Voltage	9 to 36V DC
Power *No Altitude*	26mA @ 24V DC
Power *With Altitude*[1]	52mA @ 24V DC

PHYSICAL

Depth Rating[2]	6,000m (Titanium) 1,000m (Acetal)
Temperature	-10 to 40°C Operating -20 to 60°C Storage
Connector	Subconn MCBH8M-SS *Other options available*
Weight (Forward Looking) *Air/Fresh water*	0.5/0.325kg (Titanium) 0.3/0.110kg (Acetal)
Weight (Right Angled) *Air/Fresh water*	0.520/0.350kg (Titanium) 0.270/0.125kg (Acetal)

ATTITUDE*

Pitch	± 90°
Roll	± 180°
Accuracy	0.2°
Resolution	0.1°

HEADING*

Accuracy	± 1°
Resolution	0.1°

Heading provided to Magnetic North

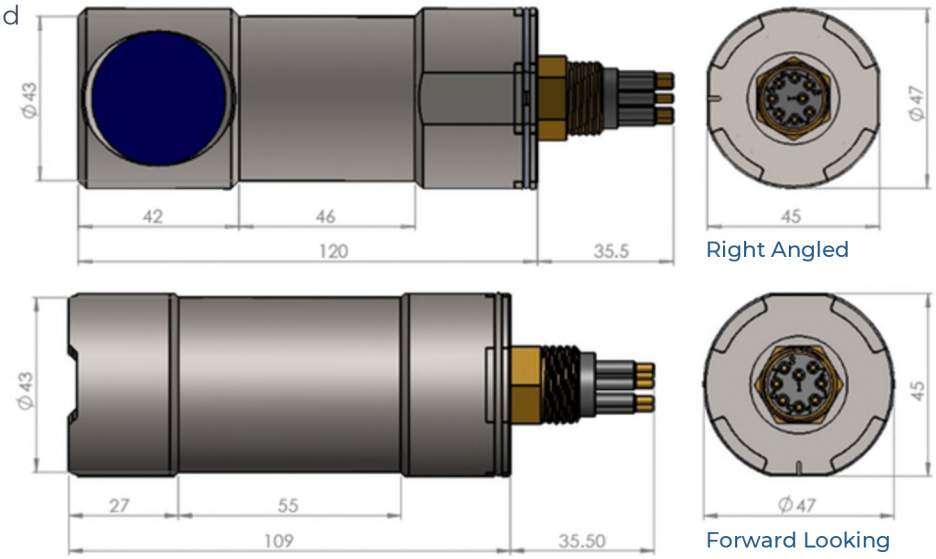

Dimensions given in mm.

*Optional
[1] *100% Tx power, 10Hz update rate.*
[2] *Also available in 11,000m, see ISA500-11K Datasheet.*

Specifications subject to change in line with product enhancements
0000.1906 | Rev. 3.3

impactsubsea.com
sales@impactsubsea.co.uk
+44 (0) 1224 460 850